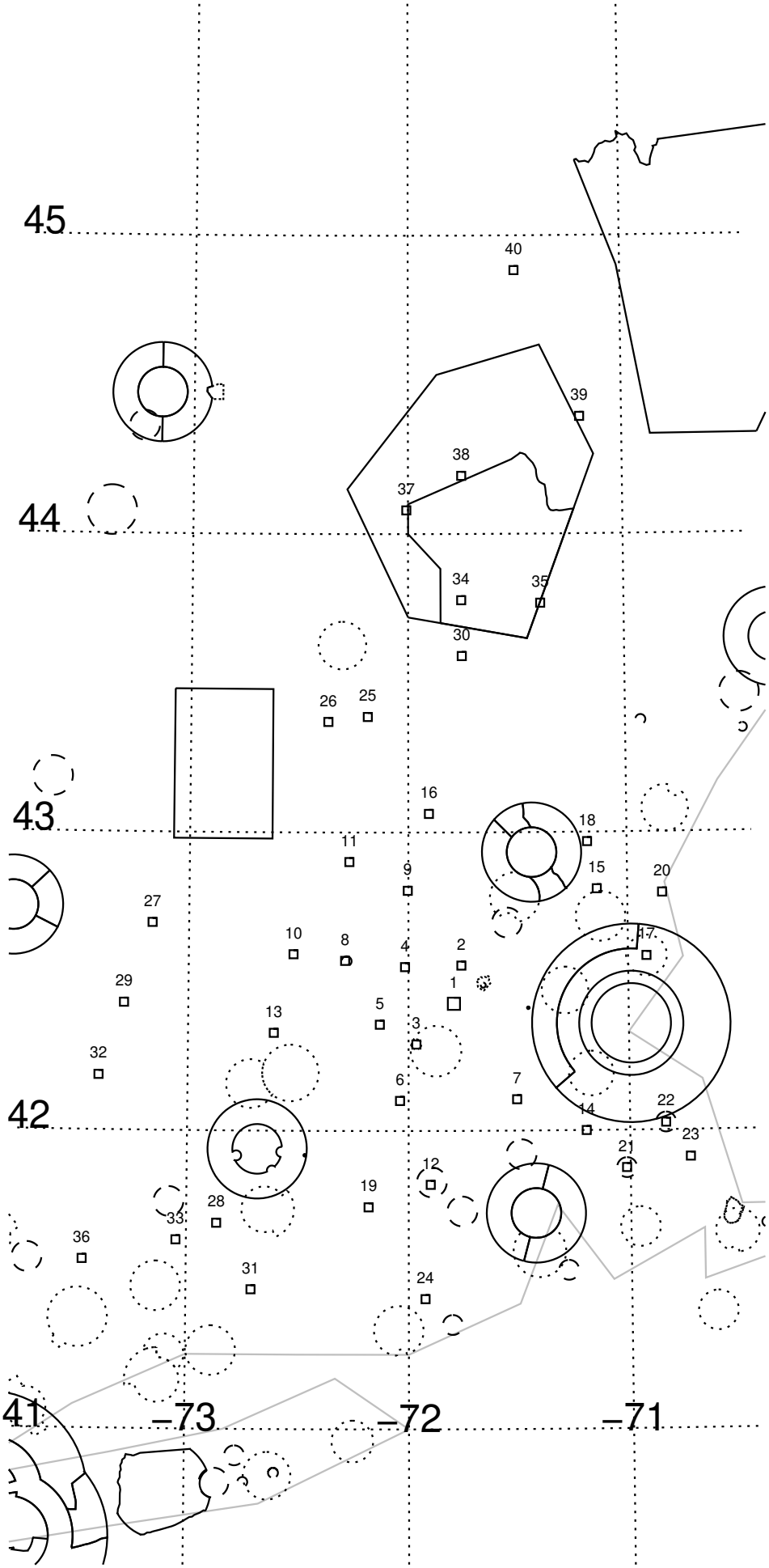Sterling, Massachusetts